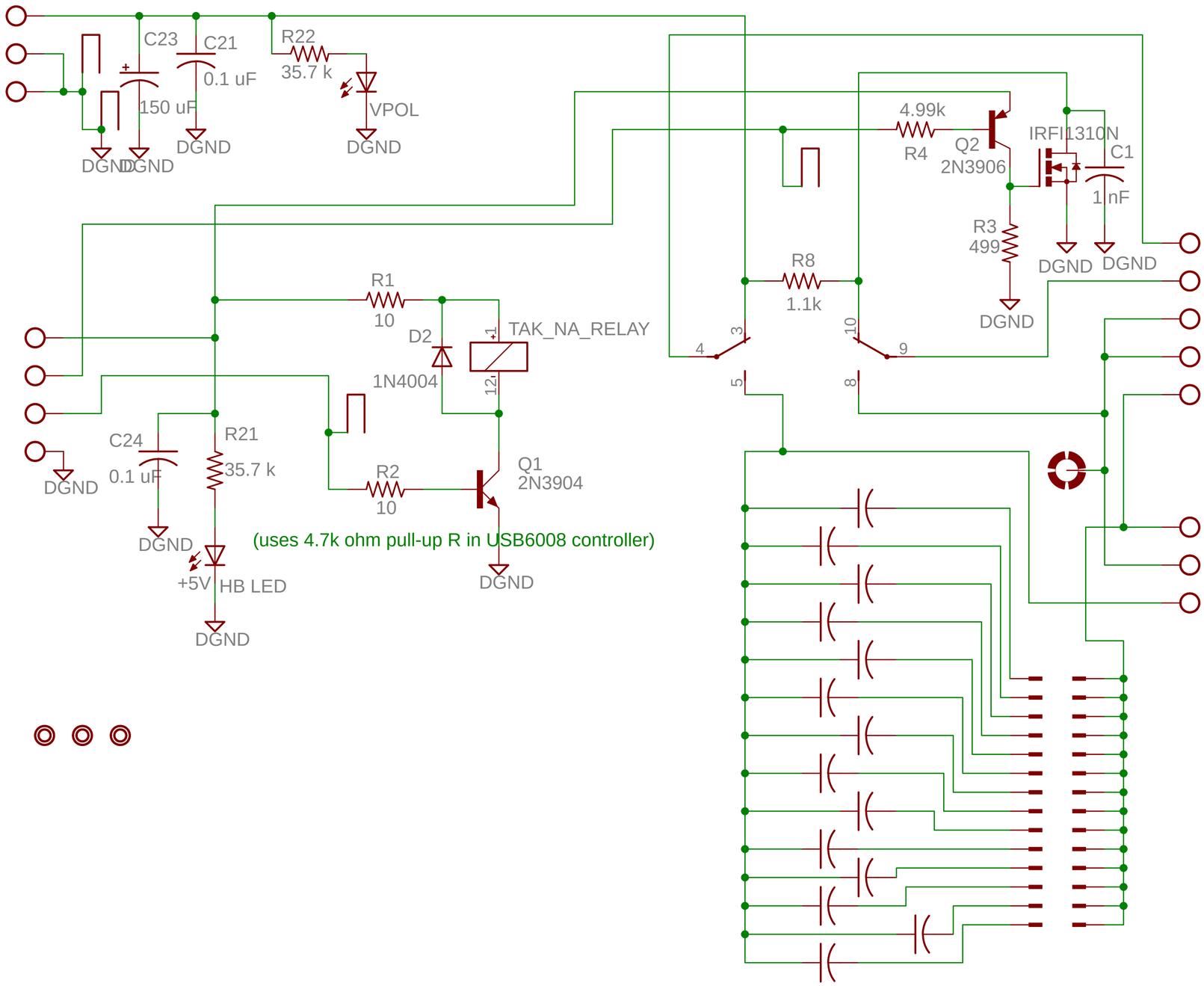
C23
C21
0.1 uF
150 uF
R22
35.7 k
VPOL
DGND
DGND
DGND
DGND
4.99k
R4
Q2
2N3906
IRFI1310N
C1
1 nF
R3
499
DGND
DGND
DGND
R8
1.1k
R1
10
D2
1N4004
TAK_NA_RELAY
12
1
4
3
5
10
9
8
C24
0.1 uF
R21
35.7 k
DGND
R2
10
Q1
2N3904
(uses 4.7k ohm pull-up R in USB6008 controller)
DGND
+5V
HB LED
DGND
DGND